Gas Discharge Tubes (GDT) RLD-1605 Series

Description

The Gas Discharge Tube (GDT) is a protective device which is filled with certain proportion of noble gas, or mixed gas or other discharge media in the space between metal electrodes and metalized ceramics, and then sealed at high temperature to form a single gap or multi-gap switch type protective device. When the protected circuit or equipment suffers to surge, GDT will change from high impedance state to low impedance state and release the surge energy to reduce the residual voltage of the circuit, and then protect the equipment or human body from the hazard of transient overvoltage.

RLD-1605 Series gas discharge tubes enable protection modules to be constructed with protection classes for N-PE applications.

Agency Approvals

Agency	Standards	Certificate No.
	UL1449	E479668

Features

- Stable performance over life
- Very fast response time
- High insulation resistance
- Non-Radioactive

Applications

- AC power line N-PE application
- Class I and class II – surge protection

Part Number Code

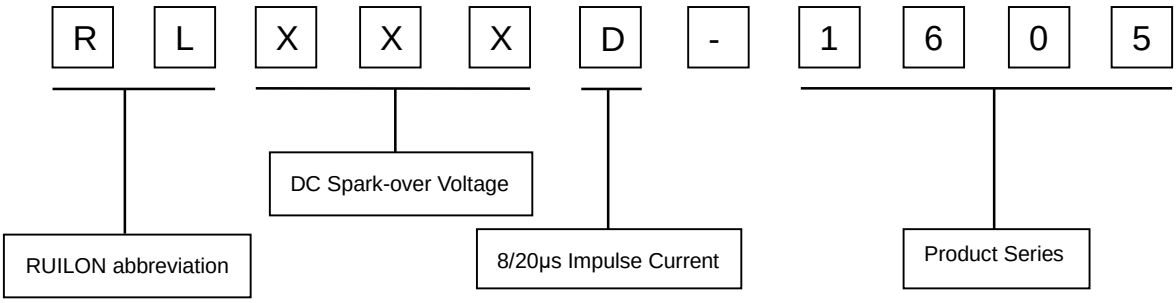

Electrical Characteristics

Model			RL600D-1605	RL800D-1605	Units
DC Spark-over Voltage [1) 2)]	at 100V/S		540~780	640~960	V
Impulse Spark-over Voltage	at 1KV/μS		<1000	<1200	V
Front of wave spark-over voltage	at 1.2/50 μs, 6 kV		<1300	<1500	V
Class I (according to IEC 61643-11)					
Maximum continuous operating voltage	at 50/60Hz	U_C	255	255	Vrms
Nominal impulse discharge current	8/20μs 15 times	I_n	20	20	KA
Impulse discharge current	10/350μs 5 times	I_{imp}	8	8	KA
Follow current	at 50/60Hz	I_f	100	100	A
Class II (according to IEC 61643-11)					
Maximum continuous operating voltage	at 50/60Hz	U_C	255	255	Vrms
Nominal impulse discharge current	8/20μs 15 times	I_n	20	20	KA
Maximum discharge current	8/20μs 2 times	I_{max}	40	40	KA
Follow current	at 50/60Hz	I_f	100	100	A
AC discharge current (TOV [3)] **at 1200V)** 1 time 50 Hz, 0.2 s			300	300	A
Breakdown time			<100	<100	ns
- typical values			<40	<40	ns
Insulation Resistance	at DC 100V		>1	>1	GΩ
Capacitance	at 1MHz		<5	<5	pF
Weight					
	RLD-1605(K0)		~4.7	~4.7	g
	RLD-1605(K1/K2/K5)		~5.8	~5.8	g
	RLD-1605(K3)		~6.2	~6.2	g
	RLD-1605(K4/K7)		~6.5	~6.5	g
Operation and storage temperature			-40~+125	-40~+125	°C
Climatic category (IEC60068-1)			40/125/21	40/125/21	
Agency Approvals UL1449(E479668)			◎	◎	
Marking, red positive			**RUILON 2R600-16**	**RUILON 2R800-16**	
Surface treatment			Matte-tin plated		

1) At delivery AQL 0.65 level II, DIN ISO 2859.

2) In ionized mode.

3) TOV - Temporary over voltage.

Dimensions (Unit: mm)

RLD-1605(K0)

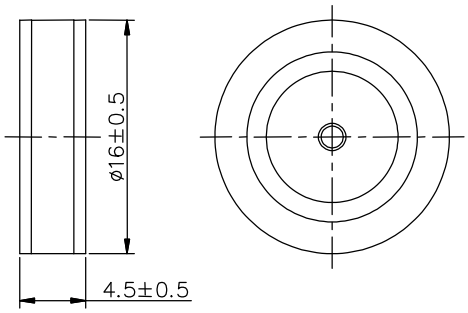

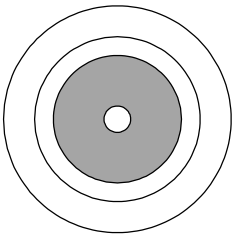

Welding area: The shadow part is the welding area, do not exceed the shadow when welding.

RLD-1605(K1)

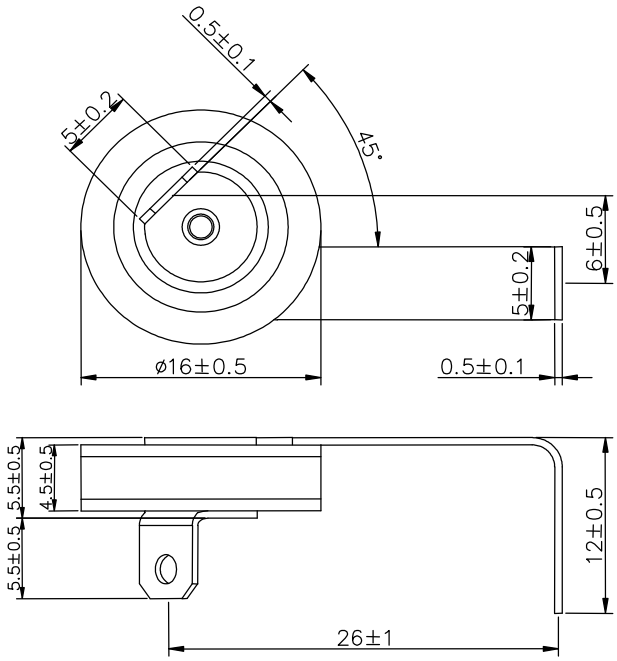

RLD-1605(K2)

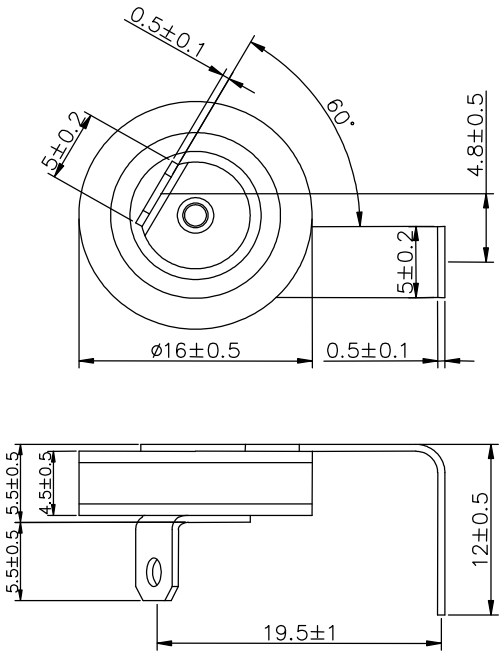

RLD-1605(K3)

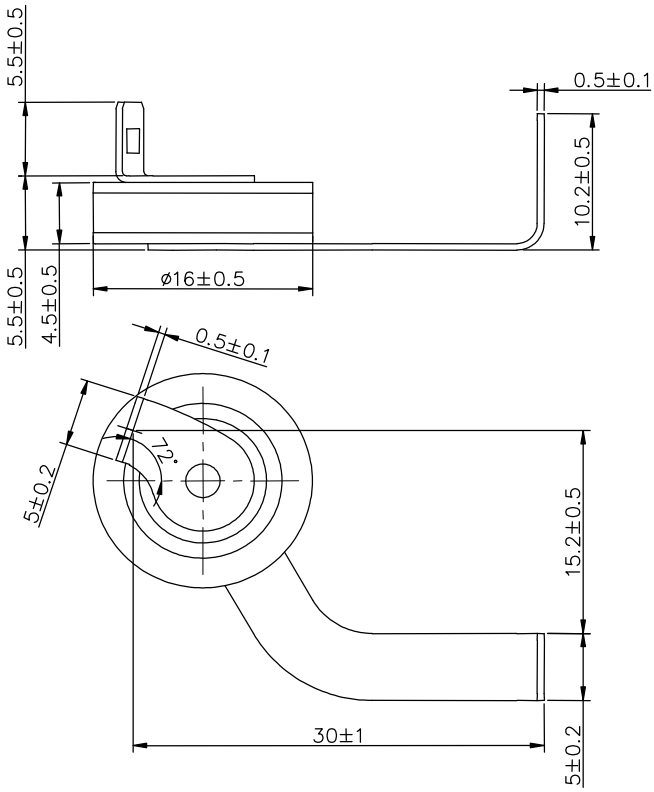

RLD-1605(K4)

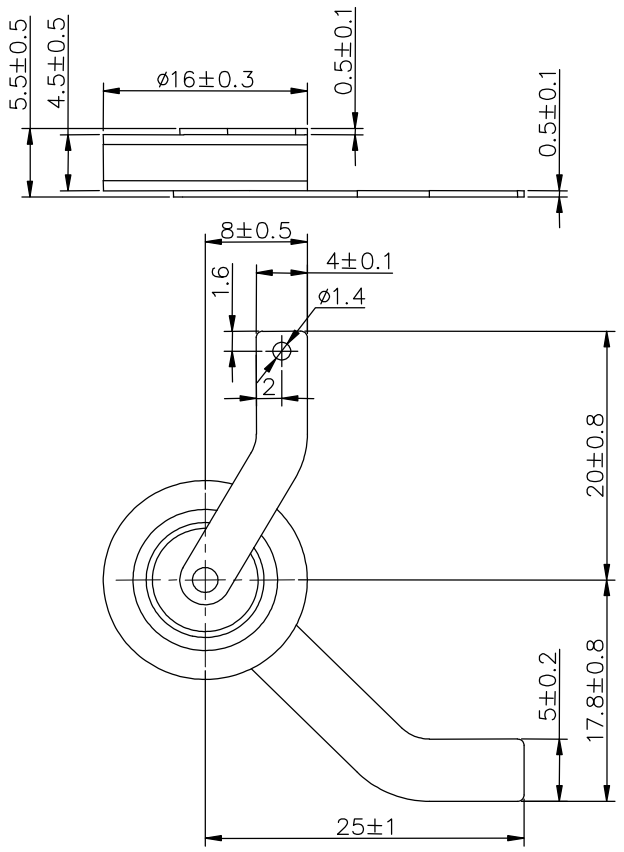

RLD-1605(K7)

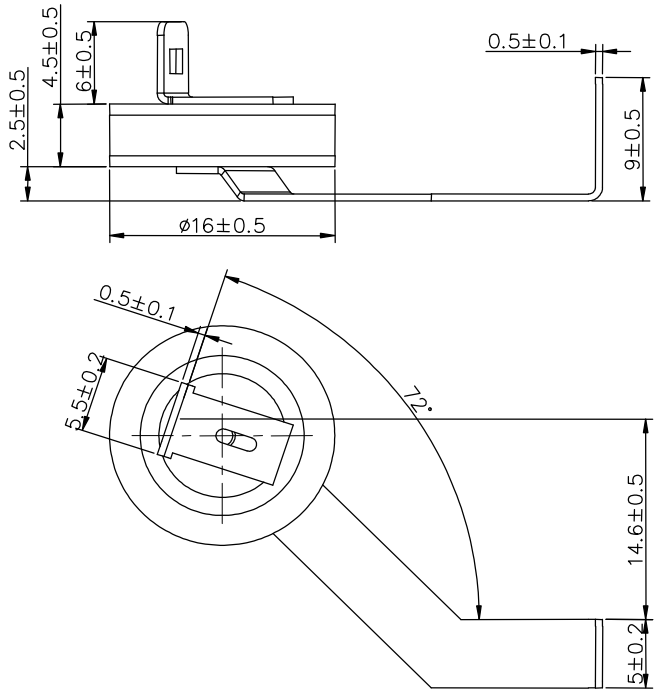

RLD-1605(K5)

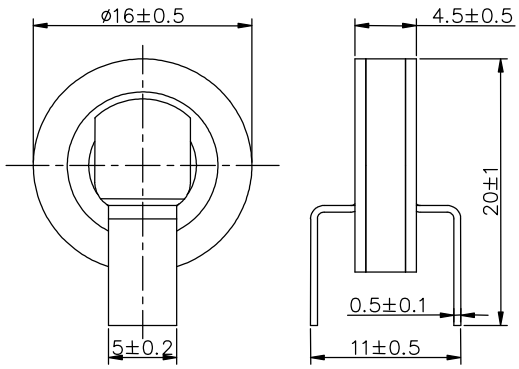

Packaging Information

RLD-1605 (K0)

	PVC tray	Inner Box	Carton
Size	265×148×17mm	275×150×50mm	315×290×272mm
Quantity	MPQ: 1 tray=100pcs	MOQ: 1 Inner Box=3 trays=300pcs	1 Carton=10 Inner boxes=3,000pcs
Photos		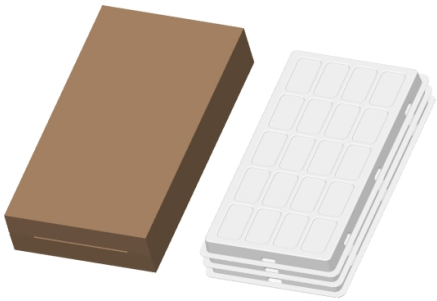	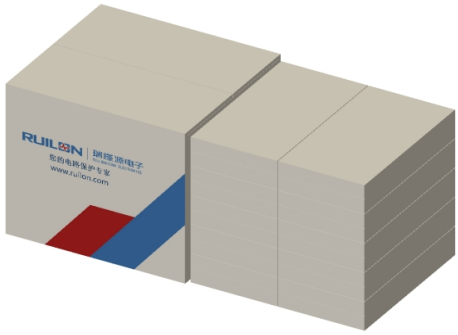

RLD-1605 (K4)

	PVC tray	Inner Box	Carton
Size	265×148×17mm	275×150×50mm	315×290×272mm
Quantity	MPQ: 1 tray=24pcs	MOQ: 1 Inner Box=3 trays=72pcs	1 Carton=10 Inner boxes=720pcs
Photos		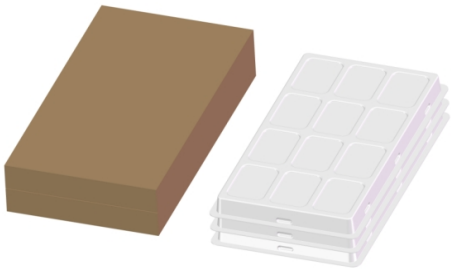	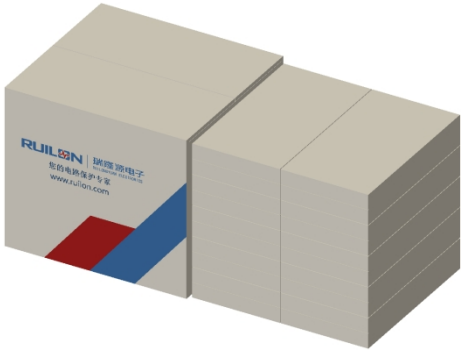

RLD-1605 (K1)/(K2)/(K3) /(K5)/(K7)

	PVC tray	Inner Box	Carton
Size	265×148×17mm	275×150×50mm	315×290×272mm
Quantity	MPQ: 1 tray=20pcs	MOQ: 1 Inner Box=3 trays=60pcs	1 Carton=10 Inner boxes=600pcs
Photos		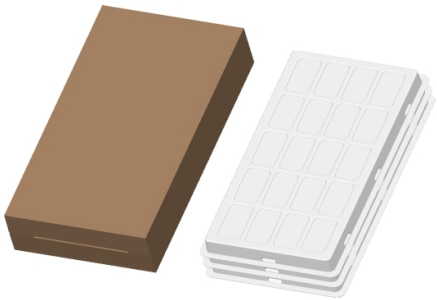	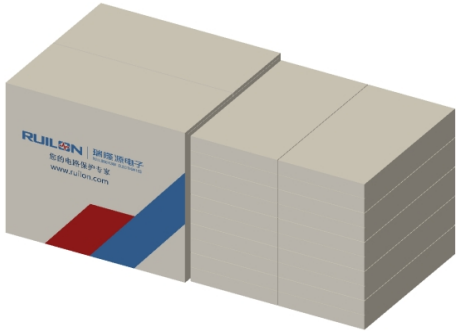

Terms and definitions

NO.	Item	Definitions
1	**Gas discharge tube(GDT)**	Gap, or several gaps, in an enclosed discharge medium, other than air at atmospheric pressure, designed to protect apparatus or personnel, or both, from high transient voltages. Also referred to as "gas tube surge arrester".
2	**DC Spark-over Voltage**	The voltage at which the gas discharge tube sparks over with slowly increasing d.c. voltage.
3	**Impulse Spark-over Voltage**	The highest voltage which appears across the terminals of a gas discharge tube in the period between the applications of an impulse of given waveform and the time when current begins to flow.
4	**Impulse discharge current 8/20μs**	Current impulse with a nominal virtual front time of 8μs and a nominal time to half-value of 20μs.
5	**Impulse discharge current 10/350μs**	Current impulse with a nominal virtual front time of 10μs and a nominal time to half-value of 350μs.
6	**1,2/50 voltage impulse**	Voltage impulse with a nominal virtual front time of 1,2μs and a nominal time to half-value of 50μs.
7	**Maximum continuous operating voltage U_C**	Maximum rms. voltage, which may be continuously applied to the GDT's mode of protection.
8	**Nominal discharge current I_n**	Crest value of the current through the GDT having a current waveform of 8/20.
9	**Maximum discharge current I_{max}**	Crest value of a current through the Surge arrester having an 8/20 waveform and magnitude according to the manufacturers specification. I_{max} is equal to or greater than I_n.
10	**Impulse discharge current for class I test I_{imp}**	Crest value of the current through the Surge arrester having a current waveform of 10/350 with specified charge transfer Q and specified energy W/R in the specified time.

11	**Follow current I_f**	Current supplied by the electrical power system and flowing through the surge arrester after an I_n-discharge current impulse.
12	**Insulation Resistance**	Insulation resistance shall be measured from each terminal to every other terminal of the GDT. The test is performed with DC50V when normal spark-over Voltage 70~150V, others with DC100V.
13	**Capacitance**	The capacitance shall be measured once at 1 MHz between all terminals unless otherwise specified.
14	**Class I**	Surge arrester protects against direct lightning strike. Direct lightning strike is defined as current impulse I_{imp} with waveform 10/350 μs. Withstand capability acc. to IEC 61643-11 standard.
15	**Class II**	Surge arrester protects against induced surge current. Induced surge current is defined as current impulse I_n and I_{max} with waveform of shorter duration than I_{imp}, 8/20 μs. Withstand capability acc. to IEC 61643-11 standard.

Cautions and warnings

- Surge arresters must not be operated directly in power supply networks.
- Surge arresters may become hot in case of longer periods of current stress (danger of burning).
- If the contacts of the surge arresters are defective, current stress can lead to the formation of sparks and loud noises.
- Surge arresters may be used only within their specified values. In case of overload, the head contacts may fail or the component may be destroyed.
- Damaged surge arresters must not be re-used.